CUP-BB1

Heavy Duty, Axially Split, 1 and 2 Stage Pumps

API 610 / ISO13709

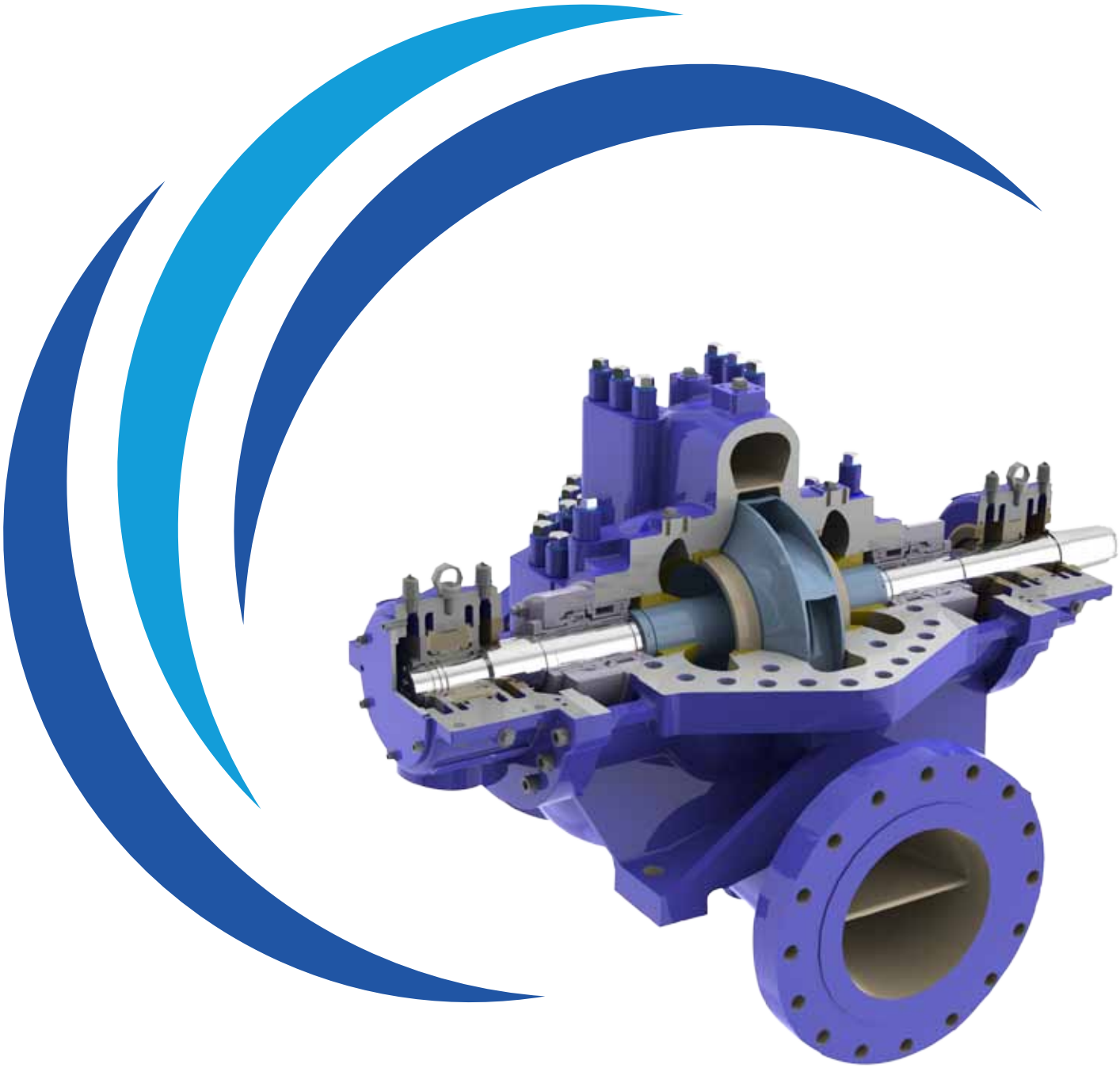

CLYDEUNION PUMPS

CLYDEUNION Pumps

a leading provider of pumping solutions

300 years of pumping experience

CLYDEUNION Pumps is one of the world's leading providers of pumping solutions. We were formed in November 2008 from the joining of Clyde Pumps and Union Pump, which brought together some of the most respected products, people and heritage brands in the business.

The two companies forming CLYDEUNION Pumps have a rich heritage and combined history of over 300 years of pump production and development. Clyde Pumps was formed in May 2007 when the *Weir Pumps (Glasgow) business was acquired from The Weir Group plc, but its roots go back to 1871 when brothers, George and James Weir, founded the engineering company of G. & J. Weir. Union Pump has an equally impressive pedigree and had been producing high technology pumps since its formation in 1885 in Michigan, USA.

Our current facility in Annecy, France

Our current facility in Glasgow, Scotland

Our current facility in Battle Creek, USA

Our current facility in Burlington, Canada

Today, CLYDEUNION Pumps is structured into seven customer focused business units. Our business units are at the heart of everything we do and provide their expertise across the **Upstream Oil, Downstream Oil, Nuclear Power, Conventional Power, Water & Industrial, Minerals & Mining** and **Offshore & Marine** sectors. In addition, our truly global **Aftermarket** capability ensures our customers are fully supported and receive exceptional care.

Our Extensive Brand Heritage:

CLYDE PUMPS Incorporating WEIR PUMPS Glasgow

*Weir Pumps - Mather & Platt - Drysdale - WH Allen
Girdlestone - Allen Gwynnes - Harland

UNION Pump

Union Pump - David Brown Pumps
DB Guinard Pumps - American Pump - Pumpline

CLYDEUNION PUMPS

Joint Ventures & Partners

S&N Pumps - IMBIL - Indonesia - China - India

**This is a heritage product acquired when the Weir Pumps business transferred to Clyde Pumps in May 2007*

High Technology Pumps for the most demanding services

CLYDEUNION Pumps specialise in the design and manufacture of API 610 centrifugal pumps and pumping packages. Our company has a worldwide reputation in delivering market leading products and services to meet the technical and commercial challenges of our customers operating in the most severe duty applications.

CUP-BB1 APPLICATIONS

CLYDEUNION Pumps has extensive experience in providing complex and bespoke pump sets to cover a range of applications these include;

- Crude oil and petroleum products; export, pipeline and transfer duties.
- Water injection and transfer
- Other process/high pressure duties

PIPELINES

CLYDEUNION Pumps has a worldwide experience of engineered pumping systems for pipeline applications that frequently alter throughput and product. The transfer of crude and refined products, often in remote locations, demands a wide scope of performance flexibility, high pumping reliability, and low power consumption. CLYDEUNION Pumps appreciate these needs and work closely with our customers to provide the optimum solution to suit the application's life cycle needs.

OIL & GAS PRODUCTION

Oil & Gas is found in some of the most inhospitable and remotest places on earth; the coldest seas, the deepest oceans and the hottest deserts. At CLYDEUNION Pumps we have a history of providing engineered pumping solutions for some of the most arduous applications in the most hostile environmental conditions imaginable. Our pumps are supplied to satisfy a wide range of critical pumping services.

REFINERIES

Today's complex refinery processes demand specialised pumping solutions. Extremes of temperature, high pressure and the ability to handle volatile fluids, calls for highly engineered pumps that can perform reliably in such arduous conditions. CLYDEUNION pumps has many years experience in the supply of process pumps to the worldwide refinery industry and is committed to providing its customers with solutions for the most complex of pumping requirements.

COMMITMENT TO QUALITY

We are committed to quality throughout our organisation. Our Quality Management System is fully approved to ISO 9001:2008 and independently verified to comply with the latest quality standards. CLYDEUNION Pumps is an environmentally responsible firm.

CUP-BB1 a leading provider of pumping solutions

The CLYDEUNION Pumps CUP-BB1 pump range are API 610 compliant, heavy duty, axially split one or two stage designs; engineered to meet the arduous requirements of the oil industry.

PROVEN PRODUCT INTEGRITY

The CUP-BB1 encompasses proven design history, evolving from our legacy Mather & Platt SB/MG, David Brown DB30, and Guinard Pumps DVDS, DVSS and RBMX ranges. All have an enviable history of sound engineering, with hundreds of units in operation worldwide.

CUP-BB1 Operating parameters:

- **Capacities** - up to 15,000 m^3/hr / 66,000 USgpm
- **Delivery Heads** - up to 1,000 m / 3,300 feet
- **Speeds** - up to 6000 rpm

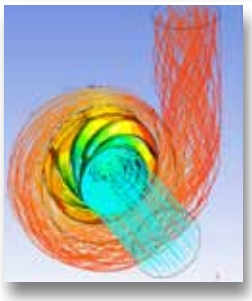

ENGINEERING EXCELLENCE

CLYDEUNION Pumps pride ourselves on our collaborative approach with our customers and suppliers to ensure the optimum engineering solution is achieved. Through our culture of innovation and a market facing ethos we have positioned ourselves at the leading edge of pump design. Our highly skilled staff utilise state of the art technology and analysis techniques to continuously improve and develop our pumping solutions, ensuring we deliver the most reliable, efficient, and low life cycle cost products. Our leading expertise includes:

- World class hydraulic design
- FEA stress and structural analysis
- Roto-dynamic analysis
- CFD analysis
- Noise and vibration
- Metallurgy
- Mechanical and electrical engineering
- Control and instrumentation

Optional Arrangments and features

FLEXIBILITY OF PERFORMANCE

CLYDEUNION Pumps appreciate that variations in flow and operating pressure mean that extreme versatility and optimised hydraulic performance are critical to our customers. The CUP-BB1 is engineered to maximise efficiency, provide high reliability, and offer the widest performance flexibility over the pump's life cycle. From short term to medium term adjustments to full hydraulic re-rates, we carefully select the CUP-BB1 pump's features specific to the your needs. Typically a combination of the following methods can be used:

Running Clearances

- Reduced running clearances are used to assist in maintaining a very high level of efficiency – close to 90%. The option of PEEK, or other non-metallic type wear rings can enable even tighter clearances, further enhancing efficiency.

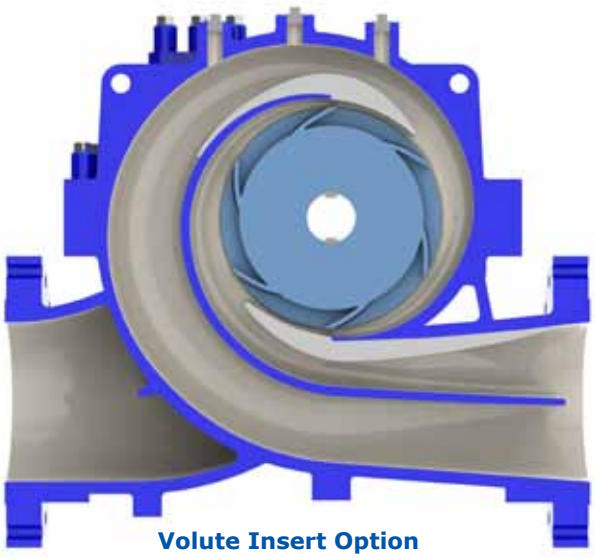

Volute Insert Option

Typical Performance Flexibility

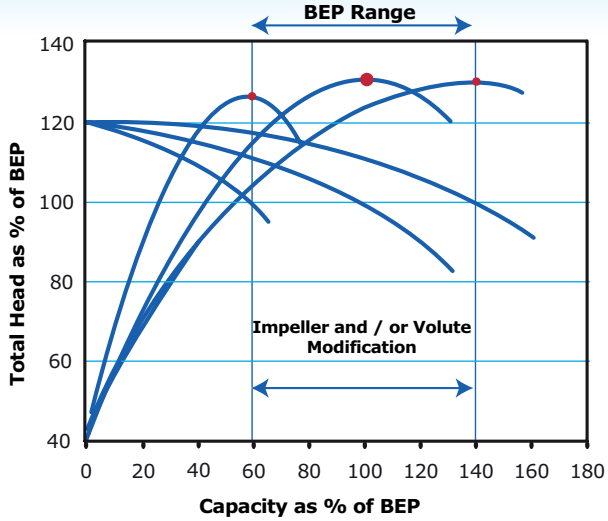

Impeller Adjustments

- The CUP-BB1 can offer low to high capacity impeller options within the same pump frame that are interchangeable and conveniently modified at site.
- Impeller blade tips can be trimmed or increased to vary the generated head.
- Velocity leaving the impeller can be adjusted via under-filing (removal of metal) from the non-working side of the impeller blade

Volute Adjustments

- Volute Lip Modification - adjusting the volute throat velocity (entering) by cutting back the stationary volute lip or lips to a predetermined size (on both single and double volutes) to increase flow.
- Volute Inserts - use of removable insert pieces within the volute to modify (reduce or increase) the internal fluid passages and hence convert to higher or lower flow capacities as required.

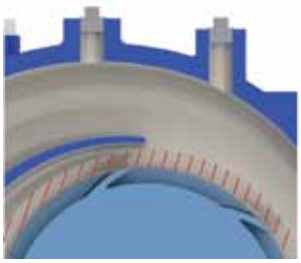

Impeller Blade Trimming

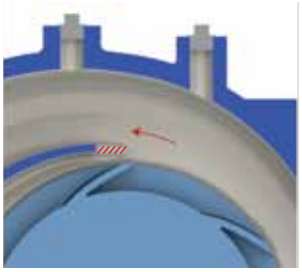

Volute Lip Chipping

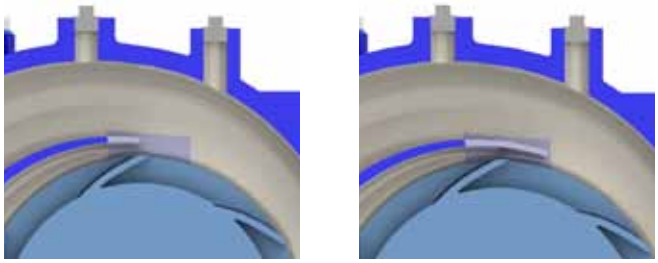

Volute Insert Option

CLYDEUNION Pumps

features of the CUP-BB1

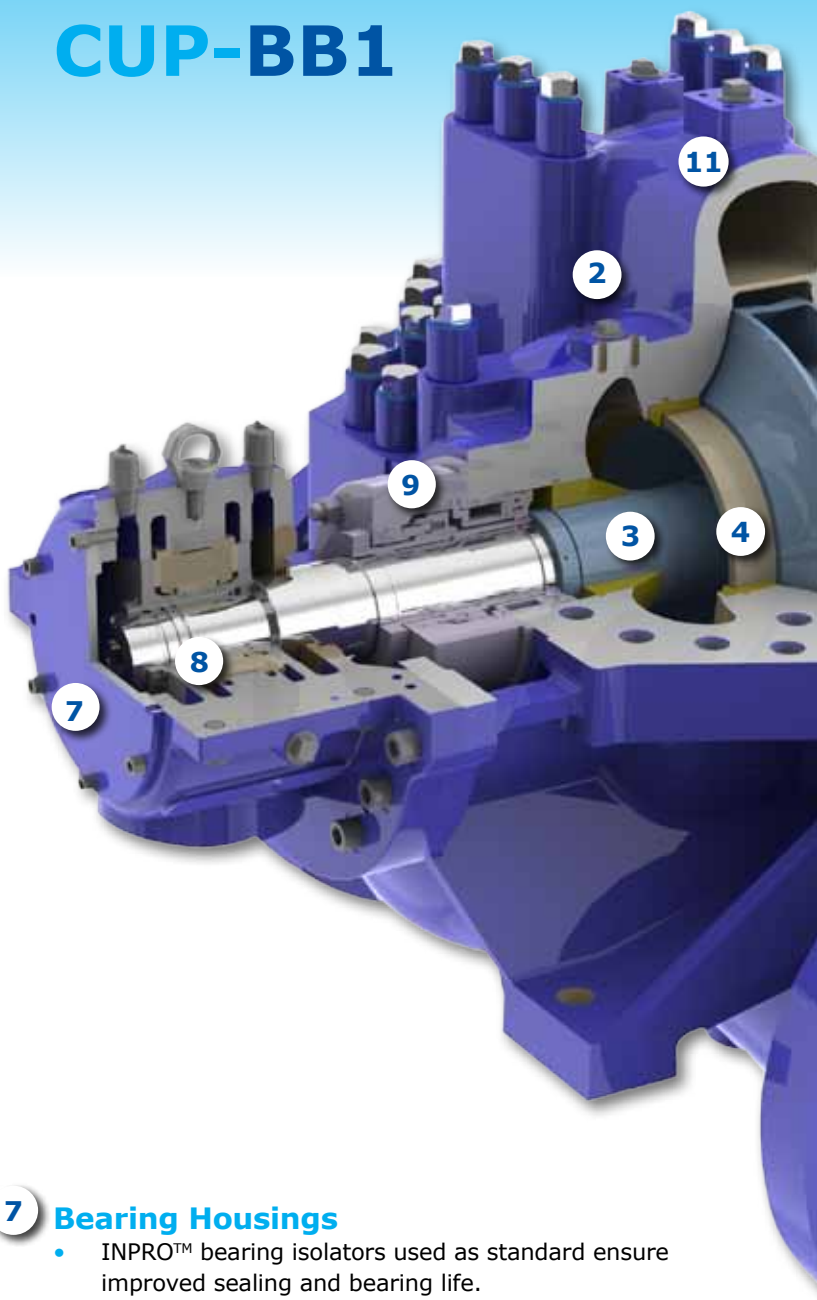

1 Comprehensive Range Coverage

- Successful and extensive, proven range
- Precision cast components, repeatable performance
- Hydraulic selection performed to meet the highest efficiency for the customer's operating parameters.

2 Pump Casing

- Heavy duty, high pressure casing suitable for parallel or series pumping
- Double Volute design enables minimised radial loads
- Designed for full MAWP and 2 x API 610 nozzle loads.
- All flanges rated for MAWP, including connecting pipework.
- Various mounting options available depending on fluid temperature or customer preference.
- Side-side connection orientation as standard.

3 Robust Rotor Design

- Renewable sleeves offer shaft protection against stuffing box wear and are easily replaced reducing maintenance costs.
- Dynamically balanced to ISO 1940 G2.5 as standard.
- Stiff shaft design ensures high critical speeds and low shaft deflection for maximum reliability, seal and bearing life.

4 Wear Parts

- Impeller wear rings fitted as standard. Option for integral wear surfaces and hard coatings.
- Materials selected to provide the optimum anti-galling properties.

5 Pump Healthcare Monitoring *(to API 670)*

- Temperature & Vibration monitoring of critical components as standard.
- Wired to skid edge junction box or control panel.

6 Impeller Arrangements

- Options for Single stage double entry, Two stage both single entry, Two stage both double entry, Two stage double entry first and single entry second, depending on operating conditions.
- Precision cast impellers, dynamically balanced to ISO 1940 G16.
- Shrink-fitted to shaft and individually axially located.
- Staggered vane impellers can be used to enhance vibration performance as necessary.

7 Bearing Housings

- INPRO™ bearing isolators used as standard ensure improved sealing and bearing life.
- Designed for high thermal efficiency to maximise utilisation of self-lubricated bearings.

8 Bearings

- Generously rated ball bearing, sleeve-ball and/or hydrodynamic, selected to suit the service.
- Forced-fed lubrication as standard for hydrodynamic arrangements.
- Ball or sleeve-ball bearings with self-contained lubrication options available, utilising oil rings and constant level oilers'.

9 Advanced Mechanical Sealing *(to API 682)*

- High reliability cartridge design.
- Large seal chambers suitable for single or dual mechanical seals.

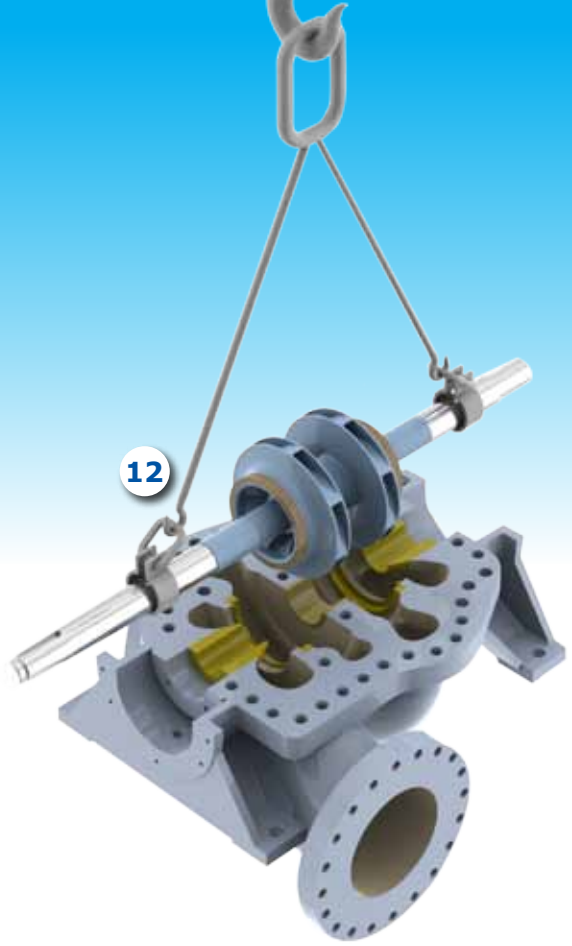

12 Ease of Maintenance

- The simple construction of the **CUP-BB1** pump offers ease of maintenance and reliability. The axially split casing allows removal of the complete rotating element without disturbing the pipe work or pump / motor alignment.

13 Pump Shaft End

- Tapered, keyed sleeve type as standard for reliable power transmissions.
- Mechanically connected to shaft ensuring max rigidity.
- Hydraulic fitment option if service requires.

10 Advanced Metallurgy Options

- All API 610 materials available.
- Materials are optimised for service conditions.
- **Oil/hydrocarbons:**
  - i. Carbon Steel Casings and Shafts
  - ii. 12-13% Chrome Impellers and Sleeves (to API code S-6)
- **Water Injection:**
  - i. Duplex/Super Duplex Stainless Steels

11 Integrally Flanged Auxiliary Connections

- Eliminates weld connection and need for bracing.
- Conventional options available.

CLYDEUNION Pumps

complete pump package solutions

1 Driver Options

The CUP-BB1 can be packaged with various types of drive equipment to suit the application's needs. Typical options include:

- 2 and 4 pole Electric Motors (fixed or VFD)
- Diesel/Gas Engine or Turbines

Further drive train options are available in order to achieve the optimal running speed.

- API 677 or API 613 Gearbox units
- Fluid Couplings (geared or variable speed)

2 Couplings

- Flexible element membrane couplings as standard for high torque drives (to API 671 when required).
- Excellent angular, lateral and axial misalignment capability, with low levels of imposed forces on equipment.
- Can be supplied with special tools for hydraulic fitting and removal of hubs.

3 Advanced Sealing Arrangements

(to API 682)

The CUP-BB1 pumps come with a range of single or multiple sealing arrangements used to suit various critical applications and pumped fluid properties.

Typically for non-sour service API 682 piping plans 11 and 31 utilise the process fluid as a flush within a single seal configuration.

For more robust solutions multiple seal arrangements are adopted. The options here are varied but fall into two principal categories:

- **Unpressurised Tandem Arrangements** where product recirculation is commonly used for the inboard seal with the outboard seal using a buffer fluid, from an external supply, at lower pressure than the seal chamber. Thus forming a high integrity secondary containment. Typically API 682 piping plan 52.
- **Pressurised Double Arrangements** ensure no process leakage of gases, unstable fluids, highly toxic, abrasive, corrosive, and viscous fluids. Outboard seal holds barrier fluid from an external supply at higher pressure than the seal chamber. Both seals are lubricated by the barrier fluid. Typically API 682 secondary flush plans 53A/B/C, incorporating a variety of vessel-type reservoir sealant systems.

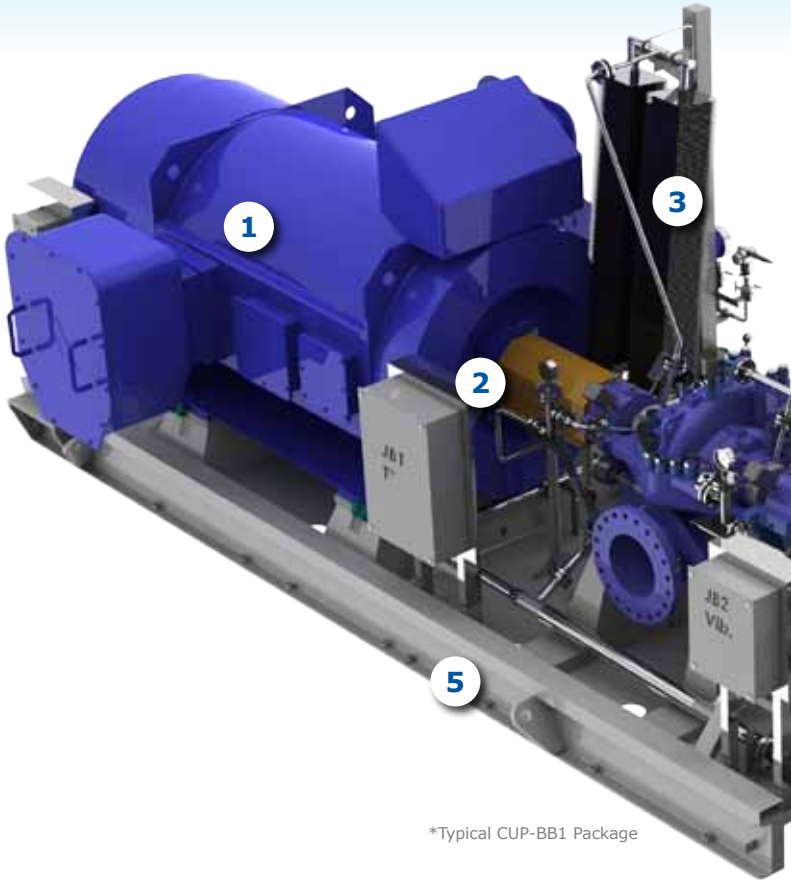

*Typical CUP-BB1 Package

4 Lubrication Systems

- Forced lubrication systems, for use with hydrodynamic bearings, are fully compliant with API 614 (ISO 10438) Chapter 2 (Special Purpose) or Chapter 3 (General Purpose) to suit customer needs.
- As standard Lube Systems are supplied on a separately mounted console but can be 'dropped-in' to the baseplate on client request.
- For anti-friction bearing arrangements self-contained lubrication arrangements are commonly used.

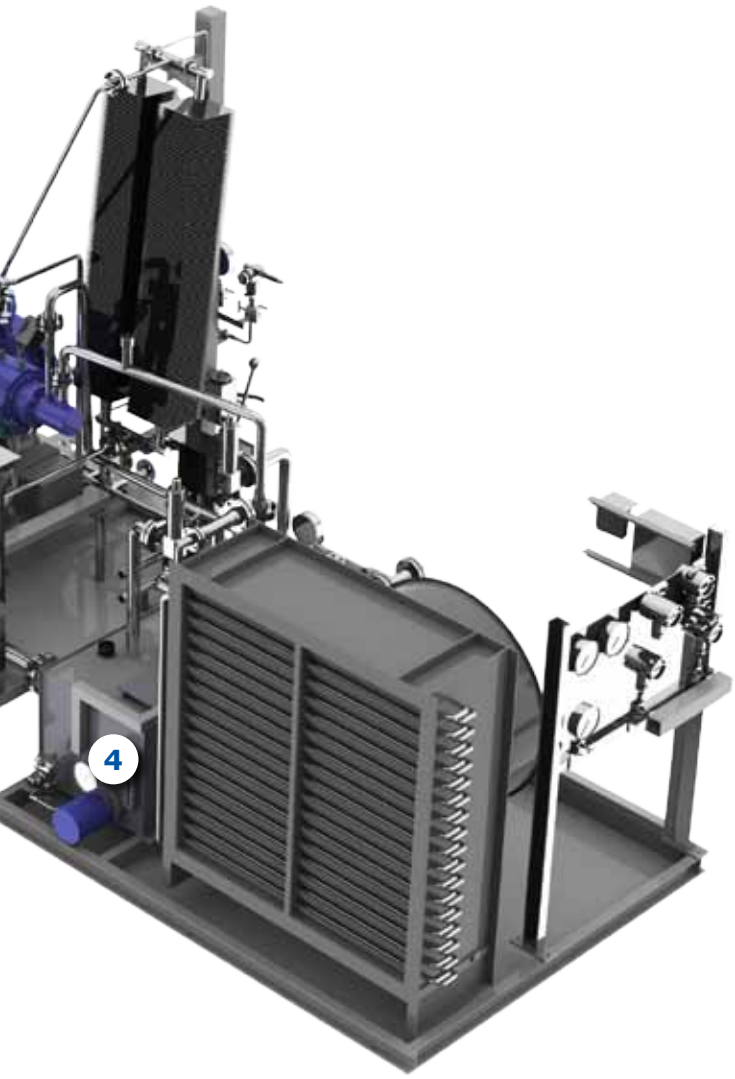

6 Package Healthcare Monitoring *(to API 670)*

- CLYDEUNION Pumps appreciate our equipment's critical role in the production process and the importance of continuous operation. The CUP-BB1 can be supplied with a range monitoring equipment to enable measurement and analysis of performance data in order to aid preventative maintenance and increase availability. Our highly experienced C & I team design bespoke systems in compliance with API 670 that includes:
- Instrumentation (indicators, sensors and monitors to continuously measure the equipment temperature, vibration, and pressure levels)
- Controls (switches, transmitters, PLCs, push-buttons) to regulate the system operation.

5 Baseplate Design

- Baseplates are all welded fabrications constructed from high quality rolled steel sections to BS, ASTM or equivalent material specification.
- Designs are influenced by a number of factors, including; customer specifications, equipment set-up, and conditions prevailing at site.
- Rigid, robust designs to ensure optimum structural integrity and minimal vibration levels.

Standard Hydraulic Range coverage charts

CUP-BB1 50Hz Coverage Chart

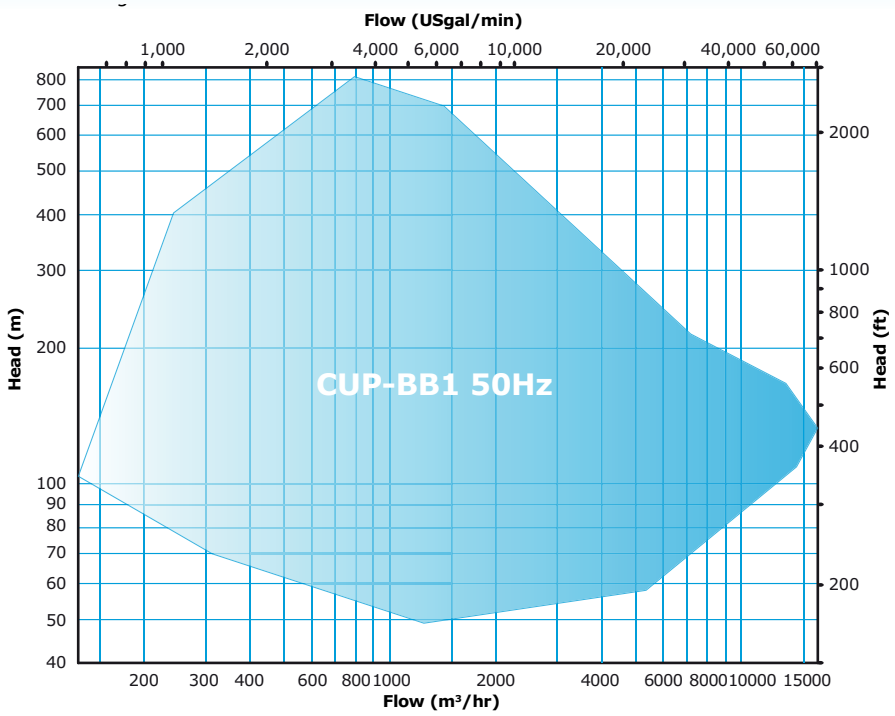

CUP-BB1 60Hz Coverage Chart

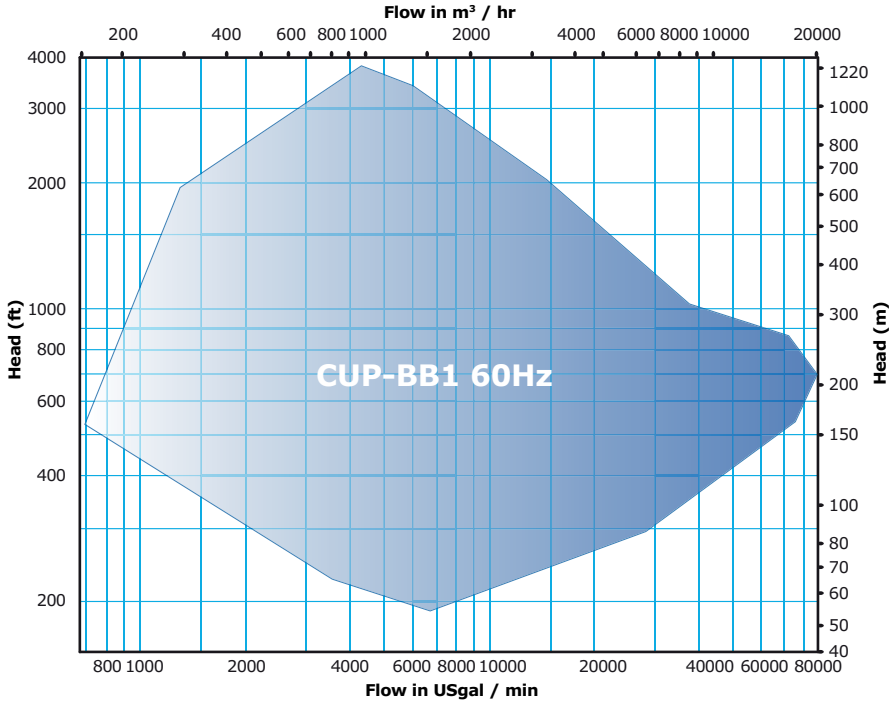

For duties outwith this standard range, CLYDEUNION Pumps are able to engineer existing, qualified pump designs to fully suit client requirements, ensuring reliability and optimised efficiency.

Global Aftermarket Capability

best in service and response

Our customer focused aftermarket organisation is positioned to provide comprehensive care for our varied and diverse product lines. Heritage and obsolete products benefit from the same level of attention and expertise ensuring that reliability and availability is maximised irrespective of a pump's length of service.

GENUINE HIGH QUALITY

Original or upgraded specification spare parts, coupled with full engineering design capability, enables longevity of reliable operation. Highly skilled and experienced service engineers ensure accuracy in build and optimised performance. The worldwide presence of CLYDEUNION Pumps offers local service facilities in over 40 countries.

SERVICE SOLUTIONS

CLYDEUNION Pumps is committed to supporting our installed base wherever it may be. Depending on your location we will provide either direct service support or support via our local authorised service partners. Whichever option is provided, you can be assured of the best attention from fully qualified and experienced engineers.

- **Upgrades & Re-rates**
- **Installation & Commissioning**
- **Inventory Management**
- **3rd Party Equipment**

Worldwide sales contacts
www.clydeunion.com

SALES	SERVICE FACILITY	MANUFACTURING				
			EUROPE			
●	●	●	Annecy:	T. +(33) 45 005 5600	F. +(33) 45 005 5880	E. annecy@clydeunion.com
●	●	●	Glasgow:	T. +(44) 141 637 7141	F. +(44) 141 637 7358	E. glasgow@clydeunion.com
●			Milan:	T. +(39) 0 2 64 672 230	F. +(39) 0 2 64 672 400	E. milan@clydeunion.com
●			Moscow:	T. +(7) 495 967 3453	F. +(7) 495 785 0636	E. moscow@clydeunion.com
●			Paris:	T. +(33) 14 717 1440	F. +(33) 14 717 1412	E. paris@clydeunion.com
●	●	●	Penistone:	T. +(44) 122 676 3311	F. +(44) 122 676 6535	E. penistone@clydeunion.com
			NORTH AMERICA			
●	●		Baton Rouge, LA:	T. +(1) 225 775 2660	F. +(1) 225 778 0212	E. batonrouge@clydeunion.com
●	●	●	Battle Creek, MI:	T. +(1) 269 966 4600	F. +(1) 269 962 3534	E. battlecreek@clydeunion.com
●	●	●	Burlington,ON:	T. +(1) 905 315 3800	F. +(1) 905 335 8262	E. burlington@clydeunion.com
●	●		Calgary, AB:	T. +(1) 403 236 8725	F. +(1) 403 236 7224	E. calgary@clydeunion.com
●	●		Los Angeles, CA:	T. +(1) 562 622 2380	F. +(1) 562 622 2375	E. losangeles@clydeunion.com
●	●	●	Houston, TX:	T. +(1) 281 372 5040	F. +(1) 281 372 5042	E. houston@clydeunion.com
			SOUTH AMERICA			
●	●	●	Itapira:	T. +(55) 19 3843 2520	F. +(55) 19 3843 2531	E. brasil@clydeunion.com
			ASIA			
●			Beijing:	T. +(86) 106 598 9500	F. +(86) 106 598 9505	E. beijing@clydeunion.com
●	●		Indonesia:	T. +(62) 21 753 5559	F. +(62) 21 753 6031	E. indonesia@clydeunion.com
●	●	●	New Delhi:	T. +(91) 120 4640 400	F. +(91) 120 4640 401	E. newdelhi@clydeunion.com
●	●	●	Shanghai:	T. +(86) 216 160 6969	F. +(86) 216 160 6968	E. shanghai@clydeunion.com
●	●		Singapore:	T. +(65) 62 76 7117	F. +(65) 62 78 7117	E. singapore@clydeunion.com
			MIDDLE EAST / AFRICA			
●	●		Abu Dhabi:	T. +(971) 2 659 1480	F. +(971) 2 659 1481	E. abudhabi@clydeunion.com
●			Algeria:	T. +(213) 21 69 2319	F. +(213) 21 69 3046	E. algeria@clydeunion.com
●	●		Angola:	T. +(244) 912 508 642	F. +(1) 281 445 4061	E. angola@clydeunion.com
●	●		Dubai:	T. +(971) 4 880 7755	F. +(971) 4 886 1133	E. dubai@clydeunion.com

Our Extensive Brand Heritage:

CLYDE PUMPS Incorporating WEIR PUMPS Glasgow

*Weir Pumps - Mather & Platt - Drysdale - WH Allen
Girdlestone - Allen Gwynnes - Harland

UNION Pump

Union Pump - David Brown Pumps
DB Guinard Pumps - American Pump - Pumpline

CLYDEUNION PUMPS

Joint Ventures & Partners

S&N Pumps - IMBIL - Indonesia - China - India

ClYDEUNION Pumps
Tel: +(44) 141 637 7141
Fax: +(44) 141 637 7358
Email: sales@clydeunion.com
www.clydeunion.com

This is a heritage product acquired when the Weir Pumps business transferred to Clyde Pumps in May 2007

We are constantly endeavouring to improve the performance of our equipment and as a result, we reserve the right to make alterations from time to time, and equipment may differ from that detailed in this brochure.

CUP-BB1 - UK - October

© CLYDEUNION Pumps 2011